CASE CONSTRUCTION

885B AWD

MOTOR GRADER

TIER 3 CERTIFIED

ENGINE - VHP

Model	FPT F4HE9684L, Tier 3 certified Compliant w/ EPA regulations effective January 2011 Electronic control
Type	4-stroke, turbocharged and air-to-air after cooled
Cylinders	6-cylinder in-line
Bore/Stroke	4.09 x 5.17 in (104 x 132 mm)
Displacement	409 in³ (6.7 L)
Fuel	Diesel
Fuel injection	Common Rail
Cooling	Liquid
Horsepower @ 2200 RPM – SAE J1995:	
Gross	220/234 hp (164/175 kW)
Net	205/219 hp (153/163 kW)
Maximum torque @ 1600 RPM:	682/726 ft·lb (924/984 N·m)

DRIVETRAIN

Rear axle	Graziano, planetary
Differential	Hydraulic lock, operator controlled
Outboard brakes	Wet disc
Number of discs/brake	6
Brake surface area	2,686 in² (17 191 cm²)
Tandems:	
Type	Welded plate
Oscillation	20° each way
Front axle	High strength, welded steel
Oscillation	15.3° each direction
Wheel lean	20° left/right
Tires – standard	14.0 x 24 12PR TL G2 Firestone
Rims	1-piece 9 in x 24 in (227 mm x 610 mm)
Transmission type: Direct drive countershaft Powershift w/ electronic shift control and inching pedal	
Pump flow @ 2200 RPM	29.5 gpm (112 L/min)
Sump	Integral
Speeds	8 forward/4 reverse
Shifting	Single lever, bump style automatic electronic control
Diagnostics	On-board
Speeds:	
Forward:	mph (km/h)
1st	2.7 (4.3)
2nd	3.7 (6.0)
3rd	5.2 (8.4)
4th	7.3 (11.8)
5th	10.4 (16.7)
6th	14.4 (23.1)
7th	20.2 (32.5)
8th	27.8 (44.8)
Reverse:	mph (km/h)
1st	2.5 (4.0)
2nd	5.0 (8.0)
3rd	9.8 (15.8)
4th	19.3 (31.0)

ELECTRICAL

Voltage	24 Volts, negative ground
Alternator	90 amp
Batteries	2 – Low-maintenance 1010 CCA – 100 Ah (20 hr rate)
Work lights: Headlights – 2; Turn signals, front/rear; Stop/tail – 2; Rear mounted floods – 2; Front mounted floods – 2.	
Backup alarm	Standard

OPERATOR ENVIRONMENT

ROPS/FOPS cab – SAE J231, ISO 3449; Adjustable operator's console; Adjustable cloth suspension seat w/ 3 in (76 mm) retractable seat belt; Safety glass; Dome light; Inside rearview mirror; Outside rearview mirrors; Cup holder; Storage tray; 12-volt outlet; Radio ready – 12 Volt; Electrical master switch – automatic; Heater/defroster/pressurizer; Air conditioner; Sound suppression; Delphi AM/FM Radio w/ CD; Cab doors – left/right; Steps – left/right; Steering wheel; Windshield wiper – front; Windshield washer – front; Sunshade.

OPERATING WEIGHT

W/ 14 ft (4.27 m) moldboard, 20.5 x 25 tires, front counterweight, 175 lb (79 kg) operator and full fuel:	41,248 lb (18 710 kg)
Weight, front axle	13,337 lb (6 050 kg)
Weight, rear axle	27,910 lb (12 660 kg)
Blade pressure	22,267 lb (10 100 kg)

HYDRAULICS

System design	Closed center, load sensing
Hydraulic pump	Load sensing piston pump, variable displacement, pressure and flow compensated
Rated flow @ 2200 RPM	49 gpm (186 L/min)
Control valve	9 section
Side shift and pitch	Hydraulic
Saddle	5 positions
Diagnostic quick couplers	8

SERVICE CAPACITIES

Engine	4.4 gal (17.5 L)
w/ filter change	4.7 gal (18.5 L)
Fuel	90 gal (341 L)
Transmission	5.8 gal (22 L)
w/ filter change	7.5 gal (28.5 L)
Radiator	10.5 gal (40 L)
Hydraulic reservoir	25 gal (94.6 L)
Hydraulic system	47.5 gal (180 L)
Circle gearbox	0.75 gal (2.8 L)
Rear axle center	10.5 gal (40 L)
Total axle	10.5 gal (40 L)
Tandem case, each	18.4 gal (69 L)

OTHER SPECIFICATIONS

Steering:	
Type	Hydrostatic power steering
Turns – lock-to-lock	4.75
Pump capacity @ 2200 engine RPM:	11.1 gpm (41.8 L/min)
Relief pressure	2,200 psi (151 bar) Integral w/ priority valve
Cylinder – 2: 2.0 in bore x 11.85 in stroke x 1.0 in rod dia. (50.8 mm x 301.0 mm x 25.4 mm)	
Supplemental steering	Integral*
Articulation:	
Type	Hydraulic actuated – w/ lock valve
Range	25° left/right
Controls	Hydraulic

NOTE: *Not applicable when equipped w/ 20.5 x 25 tires

MAINFRAME

Type	All welded box
Front section:	
Size	10.0 in x 11.73 in (254 mm x 298 mm)
Weight – each side	124.7 lb·ft (172.8 kg/m)
Rear section:	
Size	4.75 in x 11.75 in (121 mm x 299 mm)
Weight – each side	76.8 lb·ft (114.2 kg/m)

DRAWBAR

Type: "A" frame welded construction with center mounted circle turn motor	
Ball and circle	Shim adjustable

MOLDBOARD

Type	High-carbon steel
Shape	Involute curve
Length	14 ft 0 in (4 267 mm)
Height	23.6 in (600 mm)
Thickness	0.875 in (22.2 mm)
End bits	2, interchangeable
Blade pitch positions:	
Normal pitch	47°
Minimum pitch	42°
Maximum pitch	87°
Blade shift:	
Right	27.0 in (686 mm)
Left	21.0 in (533 mm)
Max. bank cutting angle:	
Right	90°
Left	90°
Max. ground penetration	28 in (711.2 mm)
Max. lift above ground	17.5 in (444.5 mm)

CIRCLE

Type	Welded construction
Diameter:	
Max. outside	69.0 in (1 752.6 mm)
Vertical member	63.0 in (1 600.2 mm)
Rotation	360°
Speed	1.2 RPM (7.2°/second)
Drive	Hydraulic motor
Type	Roller geroter
Displacement	15.26 in^3/Rev. (0.25 L/Rev.)
Rated hydraulic flow	19.8 gpm (75 L/min)

ATTACHMENTS

SCARIFIER

Type	Front mounted
Width of cut	46 in (1 168 mm)
Teeth	5
Optional	11
Tooth spacing	9.0 in (229 mm)
Optional	4.5 in (114.3 mm)
Lift above ground	20.75 in (527 mm)
Max. penetration	12.5 in (318 mm)
Weight	1,256 lb (570 kg) Includes front attachment group

PUSH BLOCK

Type	Front mounted
Weight	1,084 lb (492 kg)

REAR RIPPER

Type	Parallel
Ripper teeth	3
Optional	5
Scarifier teeth	5
Optional	9
Width of cut	86.4 in (2 195 mm)
Lift above ground:	
Ripper teeth	20.38 in (518 mm)
Scarifier teeth	27.67 in (703 mm)
Max. penetration:	
Ripper teeth	17.22 in (437 mm)
Scarifier teeth	9.43 in (252 mm)
Weight	1,874 lb (850 kg)

DOZER BLADE

Type	Front mounted
Width	109 in (2 762 mm)
Height	37.5 in (953 mm)
Lift above ground	24.5 in (622 mm)
Penetration	6.5 in (165 mm)
Weight	2,568 lb (1 165 kg) Includes front attachment group

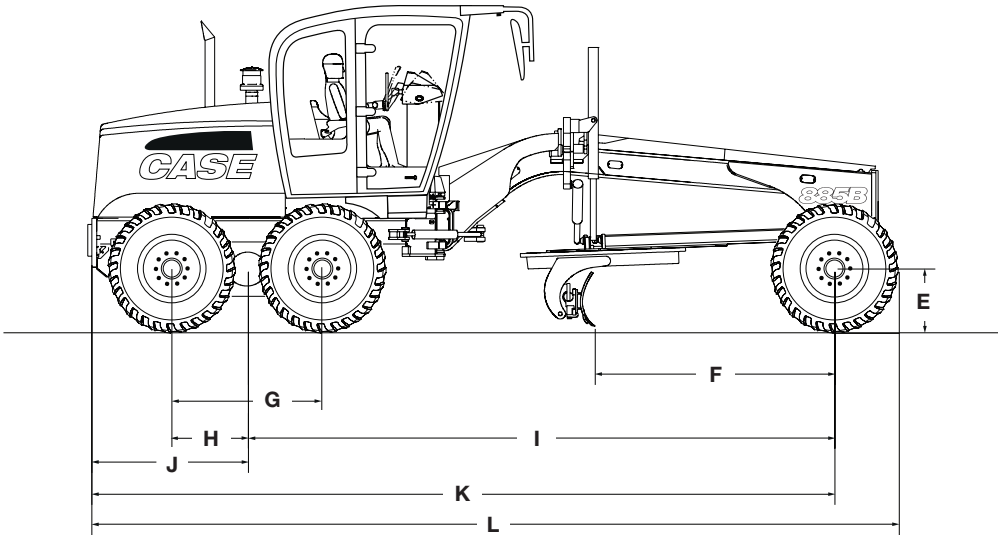

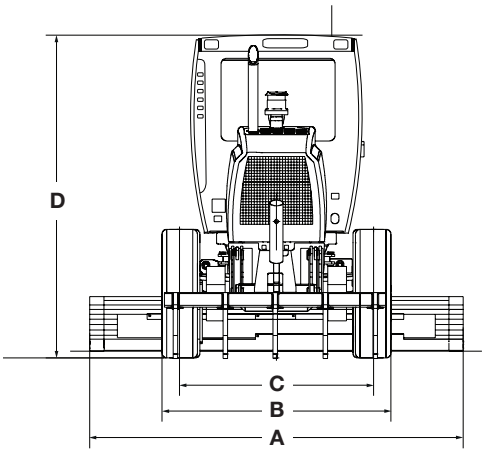

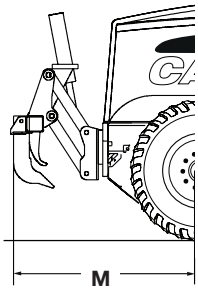

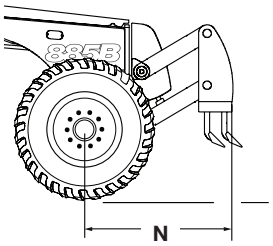

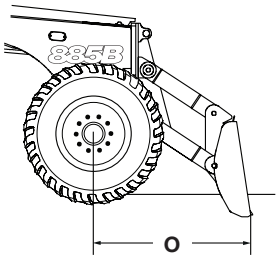

Line drawings are for illustrative purpose only and may not be exact representation of unit.

DIMENSIONS

A. Blade width	14 ft 0 in (4 267 mm)
B. Distance between outside edges of tires	8 ft 8.5 in (2 664 mm)
C. Wheel tread	7 ft 1 in (2 174 mm)
D. Height to top of cab Height to top of cab – low profile	11 ft 0 in (3 340 mm) 10 ft 4 in (3 150 mm)
E. Tire radius – when static	2 ft 0 in (610 mm)
F. Blade base	8 ft 5 in (2 562 mm)
G. Distance between tandem axles	5 ft 4 in (1 624 mm)
H. Distance between tandem center and wheel	2 ft 8 in (812 mm)
I. Wheelbase	20 ft 5 in (6 219 mm)
J. Distance between tandem center and rear end of machine	5 ft 5 in (1 650 mm)
K. Distance between front axle and rear end of machine	25 ft 10 in (7 874 mm)
L. Overall length – without ripper or front attachment	28 ft 0 in (8 534 mm)
M. Distance between rear tires and rear ripper	6 ft 8 in (2 040 mm)
N. Distance between front tires and front scarifier	5 ft 0 in (1 524 mm)
O. Distance between front tires and front dozer blade	5 ft 5 in (1 645 mm)
Outside tire turning radius	23 ft 11 in (7 289 mm)
Ground clearance – rear axle	14.1 in (359 mm)
Ground clearance – front axle	22.8 in (580 mm)

NOTE: All units equipped with 17.5 x 25-12 PR tires, ROPS cab with heater and A/C, std. battery, full fuel, 175 lb (79 kg) operator. Specifications per ISO 7134.

STANDARD EQUIPMENT

OPERATOR ENVIRONMENT

See page 1

ENGINE

FPT F4HE9684L turbocharged diesel
Tier 3 certified
Temperature controlled cooling fan
Charge air cooler
Air intake grid heater
Common rail electronic fuel injection
Hydraulic driven cooling fan
Auto idle

DRIVETRAIN

Hydraulic differential lock

HYDRAULICS

Closed center, load sensing hydraulic system
Controls for all functions
9 section control valve
Hydraulic moldboard side shift and pitch
5-position saddle
14 ft x 23.6 in (4 267 x 600 mm) moldboard
Moldboard Float Control
8 hydraulic diagnostic quick couplers
Front and rear piping for hydraulic attachment

TIRES

14.0 x 24-12 PR

INSTRUMENTS

Analog displays/Gauges:
Fuel level; Engine coolant temperature; Transmission oil temperature; Hydraulic oil temperature.

Monitor Functions:
Hour meter; Engine speed; Travel speed; Current gear selection; FNR indication; Clock; Trip computer; Fuel consumption; Fuel level percentage; Oil pressure; Coolant temperature; Engine oil temperature; Transmission oil temperature; Hydraulic oil temperature; Turbocharger air temperature; Differential lock indicator; Gear selection indicator; Engine diagnostics; Transmission diagnostics; System voltage; Error reporting; Warning prompts; Indicator warning lamps – main warning, parking brake, low brake pressure, high beams, turn signals, hazard lights, low fuel.

ELECTRICAL

2 – Heavy-duty batteries – 1010 CCA
Electronic Systems Monitor
Horn
Alternator – 90 amp
Backup alarm
Headlights
2 – Turn signals front
2 – Tail lights with turn signals, brake lights
Flood lights – cab mounted

TELEMATICS

CASE SiteWatch™ Telematics – includes hardware and a 3-yr Advanced data subscription

OPTIONAL EQUIPMENT

MOLDBOARDS

12 ft x 22 in (3 658 x 559 mm), involute curve
13 ft x 23.6 in (3 962 x 600 mm), involute curve
Extensions – 2 ft (610 mm)
Front Float Control
Lift cylinder/side shift accumulator
Lift cylinder accumulator
Moldboard corner reinforcement

OPERATOR ENVIRONMENT

Front windows openable with rear window defroster
Lower front wiper/washers
Rear windshield washer
Air suspension seat

TIRES

14.0 x 24-12 PR
14.0 x R24 XGLA
14.0 x R24 Snoplus
16.0 x 24-12 PR
17.5 x 25-12 PR
17.5 x 25-16 PR
17.5 x R25 XTLA
17.5 x R25 Snoplus

ELECTRICAL

2 – Front mounted working lights
2 – Floodlights at moldboard
2 – Floodlights at articulation
Snow plow lighting package

OTHER

Bidirectional engine cooling fan
Cold weather package
Fire extinguisher
Strobe light
Tool box – without tools
Deluxe tool box – with tools
Tire inflator kit
Spare wheel
Spare wheel support
Slow moving vehicle sign
Rear pull hook

ATTACHMENTS

Front pull hook
Front counterweight
Front dozer blade
Front scarifier
Front push plate
Front support and lift cylinder
Rear ripper

CaseCE.com

©2017 CNH Industrial America LLC. All rights reserved. CASE is a trademark registered in the United States and many other countries, owned by or licensed to CNH Industrial N.V., its subsidiaries or affiliates. CNH Industrial Capital is a trademark in the United States and many other countries, owned by or licensed to CNH Industrial N.V., its subsidiaries or affiliates. Printed in U.S.A. Contains 10% post-consumer fiber.

IMPORTANT: CASE Construction Equipment Inc. reserves the right to change these specifications without notice and without incurring any obligation relating to such change. Availability of some models and equipment builds vary according to the country in which the equipment is used. The illustrations and text may include optional equipment and accessories and may not include all standard equipment.Your CASE dealer/distributor will be able to give you details of the products and their specifications available in your area.

Biodiesel Ready

CASE Construction Equipment is biodiesel-friendly. NOTE: All engines meet current EPA emissions regulations. All specifications are stated in accordance with SAE Standards or Recommended Practices, where applicable.

SAFETY™ NEVER HURTS

Always read the Operator's Manual before operating any equipment. Inspect equipment before using it, and be sure it is operating properly. Follow the product safety signs and use any safety features provided.

Form No. CCE201701885BAWD
Replaces Form No. CCE201503885BAWD